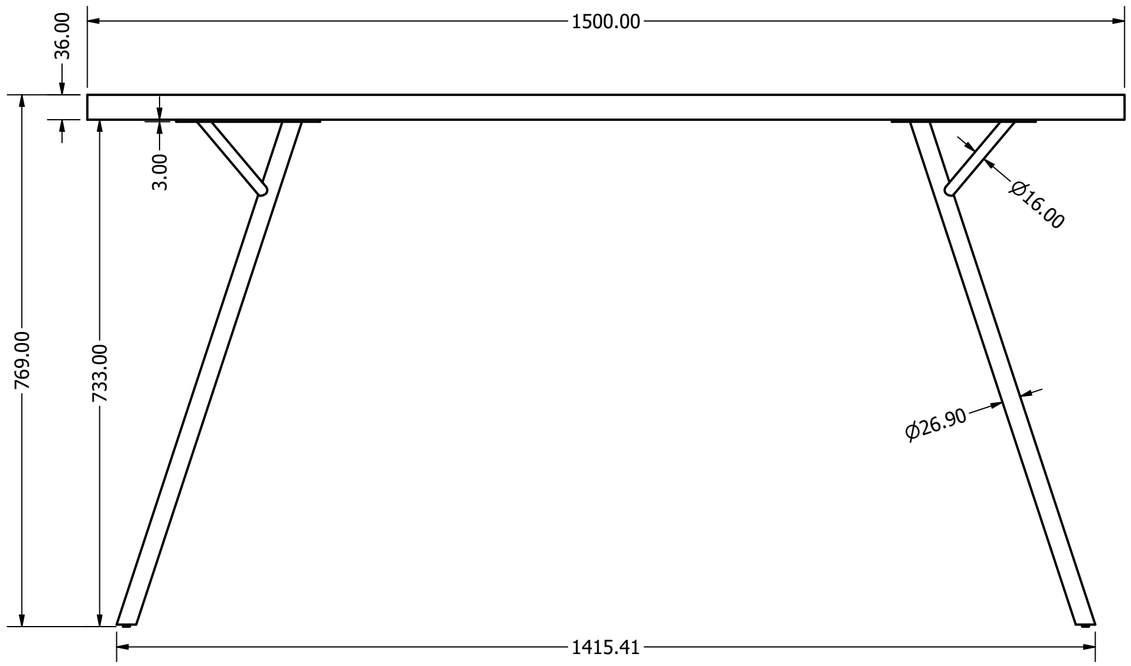

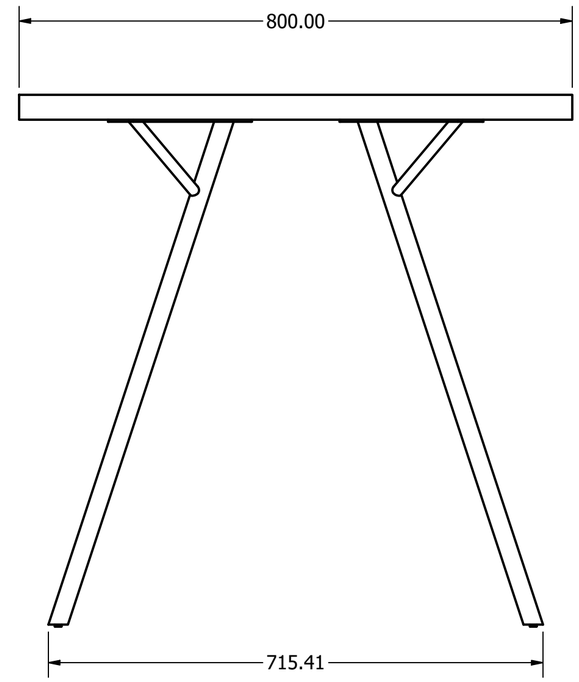

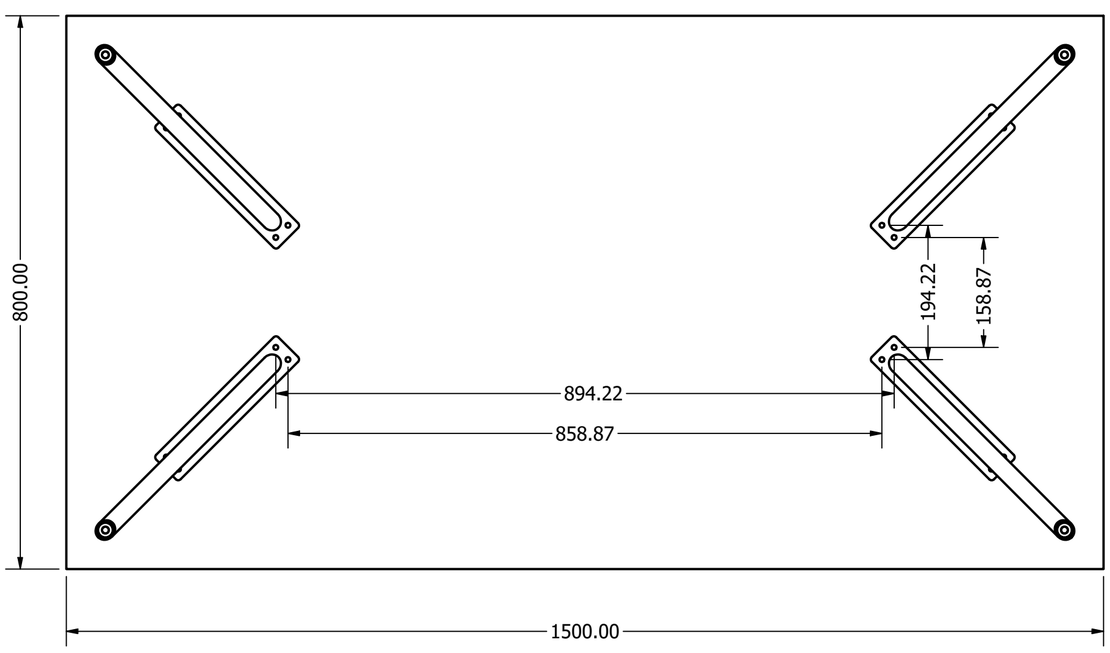

DRAWN Moraru E.	26.03.2025	decoprim.md		
CHECKED				
QA		TITLE Easy Dining		
MFG				
APPROVED		Recomended top size:		
		SIZE A3	Powder coated	REV
	N/A	SCALE 0,15 : 1	SHEET 1 OF 1	